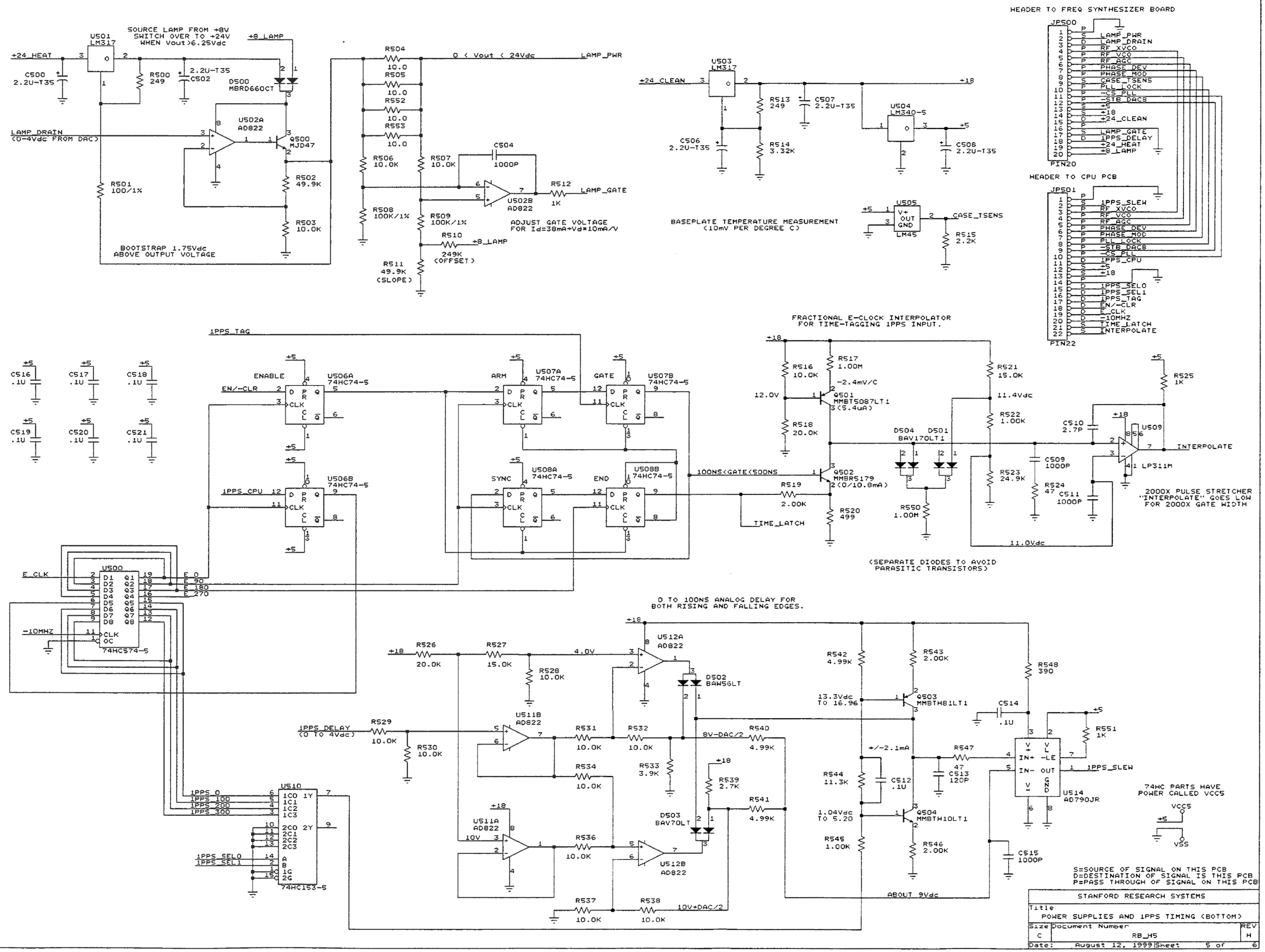
SOURCE LAMP FROM +8V
SWITCH OVER TO +24V
WHEN Vout>6.25Vdc
U501
LM317
+24_HEAT
C500
2.2U-T35
R500
249
C502
2.2U-T35
+8_LAMP
D500
MBRD660CT
U502A
AD822
LAMP_DRAIN
(0-4Vdc FROM DAC)
Q500
MJD47
R501
100/1%
R502
49.9K
R503
10.0K
BOOTSTRAP 1.75Vdc
ABOVE OUTPUT VOLTAGE
R504
10.0
R505
10.0
R552
10.0
R553
10.0
0 < Vout < 24Vdc
LAMP_PWR
R506
10.0K
R507
10.0K
C504
1000P
R508
100K/1%
R509
100K/1%
U502B
AD822
R512
1K
LAMP_GATE
ADJUST GATE VOLTAGE
FOR Id=38mA+Vd=10mA/V
R510
249K
(OFFSET)
+8_LAMP
R511
49.9K
(SLOPE)
U503
LM317
+24_CLEAN
R513
249
C507
2.2U-T35
+18
C506
2.2U-T35
R514
3.32K
U504
LM340-5
+5
C508
2.2U-T35
U505
V+
OUT
GND
LM45
CASE_TSENS
R515
2.2K
BASEPLATE TEMPERATURE MEASUREMENT
(10mV PER DEGREE C)
HEADER TO FREQ SYNTHESIZER BOARD
JP500
LAMP_PWR
LAMP_DRAIN
RF_XVCO
RF_VCO
RF_AGC
PHASE_DEV
PHASE_MOD
CASE_TSENS
PLL_LOCK
-CS_PLL
-STB_DAC8
+5
+18
+24_CLEAN
LAMP_GATE
1PPS_DELAY
+24_HEAT
+8_LAMP
PIN20
HEADER TO CPU PCB
JP501
1PPS_SLEW
RF_XVCO
RF_VCO
RF_AGC
PHASE_DEV
PHASE_MOD
PLL_LOCK
-STB_DAC8
-CS_PLL
1PPS_CPU
+5
+18
1PPS_SEL0
1PPS_SEL1
1PPS_TAG
EN/-CLR
E_CLK
-10MHZ
TIME_LATCH
INTERPOLATE
PIN22
C516 .1U
C517 .1U
C518 .1U
C519 .1U
C520 .1U
C521 .1U
1PPS_TAG
ENABLE
EN/-CLR
U506A
74HC74-5
ARM
U507A
74HC74-5
GATE
U507B
74HC74-5
1PPS_CPU
U506B
74HC74-5
SYNC
U508A
74HC74-5
END
U508B
74HC74-5
100NS<GATE<500NS
FRACTIONAL E-CLOCK INTERPOLATOR
FOR TIME-TAGGING 1PPS INPUT.
+18
R516
10.0K
R517
1.00M
-2.4mV/C
12.0V
Q501
MMBT5087LT1
(5.4uA)
R518
20.0K
R521
15.0K
11.4Vdc
R522
1.00K
D504
BAV170LT1
D501
R519
2.00K
Q502
MMBR5179
(0/10.8mA)
R520
499
R550
1.00M
TIME_LATCH
C510
2.7P
U509
LP311M
R525
1K
C509
1000P
R523
24.9K
R524
47
C511
1000P
2000X PULSE STRETCHER
"INTERPOLATE" GOES LOW
FOR 2000X GATE WIDTH
11.0Vdc
(SEPARATE DIODES TO AVOID
PARASITIC TRANSISTORS)
U500
74HC574-5
E_CLK
-10MHZ
E 0
E 90
E 180
E 270
0 TO 100NS ANALOG DELAY FOR
BOTH RISING AND FALLING EDGES.
R526
20.0K
R527
15.0K
4.0V
R528
10.0K
U512A
AD822
D502
BAW56LT
1PPS_DELAY
(0 TO 4Vdc)
R529
10.0K
R530
10.0K
U511B
AD822
R531
10.0K
R532
10.0K
R533
3.9K
R534
10.0K
8V-DAC/2
R540
4.99K
R539
2.7K
D503
BAV70LT
R541
4.99K
U511A
AD822
10V
R536
10.0K
U512B
AD822
R537
10.0K
R538
10.0K
10V+DAC/2
R542
4.99K
R543
2.00K
13.3Vdc
TO 16.96
Q503
MMBTH81LT1
+/-2.1mA
R544
11.3K
C512
.1U
1.04Vdc
TO 5.20
Q504
MMBTH10LT1
R545
1.00K
R546
2.00K
ABOUT 9Vdc
R548
390
C514
.1U
R547
47
C513
120P
R551
1K
U514
AD790JR
1PPS_SLEW
C515
1000P
U510
74HC153-5
1PPS_0
1PPS_100
1PPS_200
1PPS_300
1PPS_SEL0
1PPS_SEL1
74HC HC PARTS HAVE
POWER CALLED VCC5
VCC5
VSS
S=SOURCE OF SIGNAL ON THIS PCB
D=DESTINATION OF SIGNAL IS THIS PCB
P=PASS THROUGH OF SIGNAL ON THIS PCB
STANFORD RESEARCH SYSTEMS
Title
POWER SUPPLIES AND 1PPS TIMING (BOTTOM)
Size C
Document Number
RB_H5
REV H
Date: August 12, 1999
Sheet 5 of 6